SHEET SCALE 1:1 | SCALE 1:2 | DESCRIPTION **PAIR SS LEVER HANDLES ON RECTANGULAR PLATE WITH YALE HOLE** | ITEM CODE **2MM.16B.00C2.44**

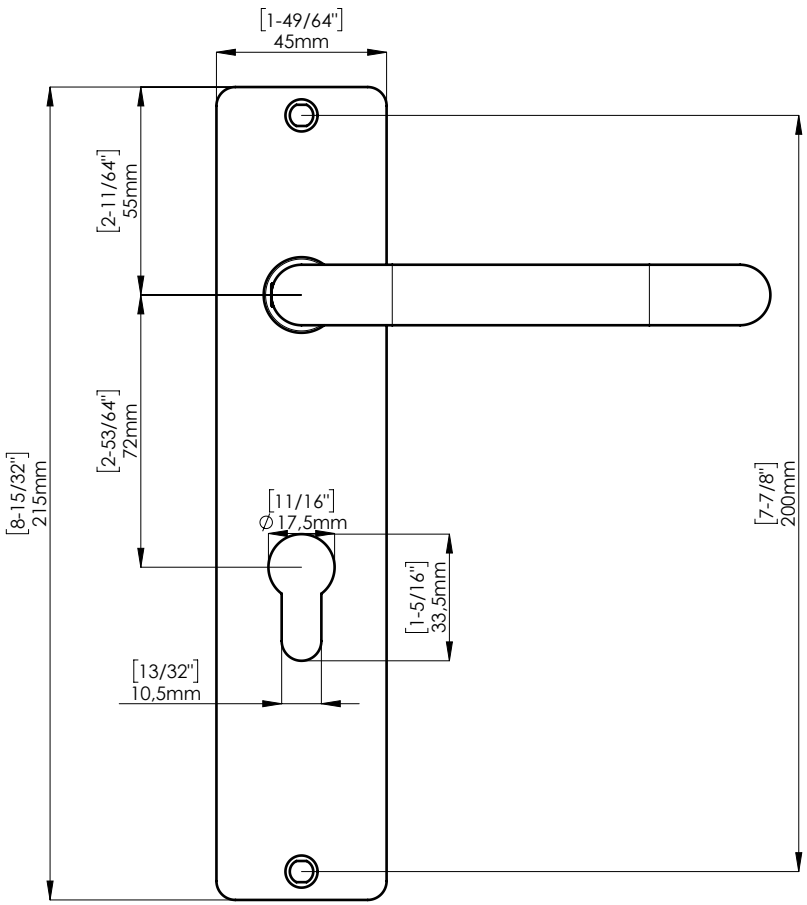

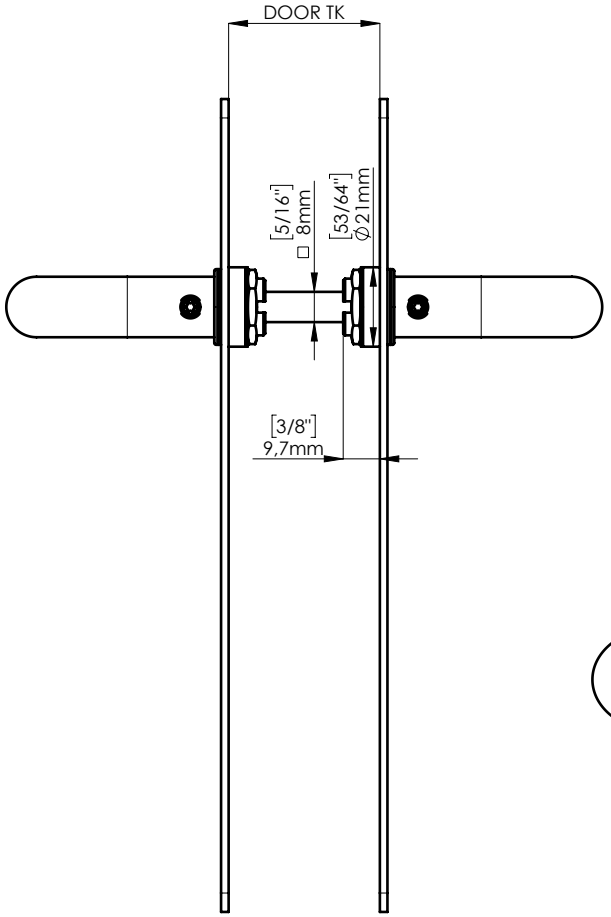

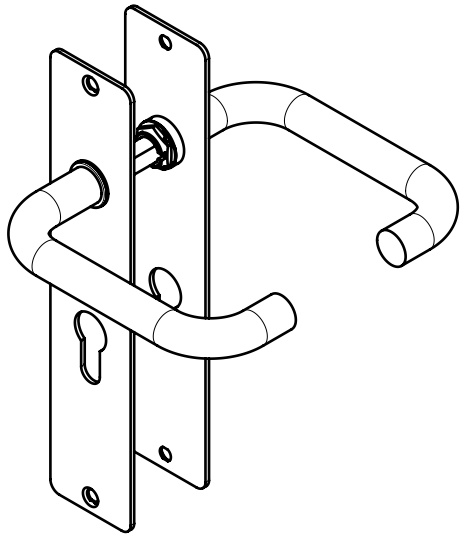

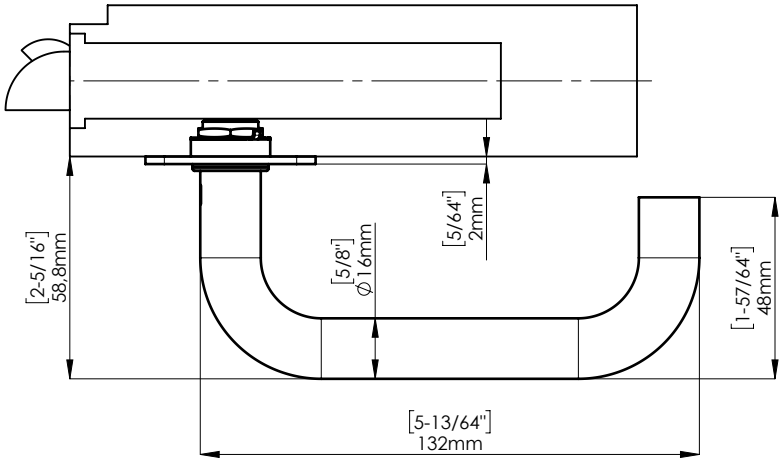

SPINDLE AND FIXING KIT INCLUDED

SQUARE SPINDLE □8 mm

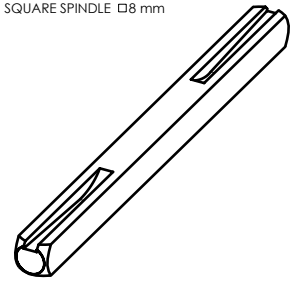

THICKNESS 35 - 80 mm

SINGLE FIXING
WOOD DOOR

SHEET SCALE 1:1