SHEET SCALE 1:1 | inches | SCALE 1:2 | DESCRIPTION | **HANDS FREE PULL COLLECTION DESIGN 06 OPTION 04** | ITEM CODE **GHF.D06.0004.44**

FIXING PLATE ALWAYS INCLUDED
FIXING KIT FOR WOOD DOORS INCLUDED
OTHER FIXING KIT AVAILABLE ON REQUEST

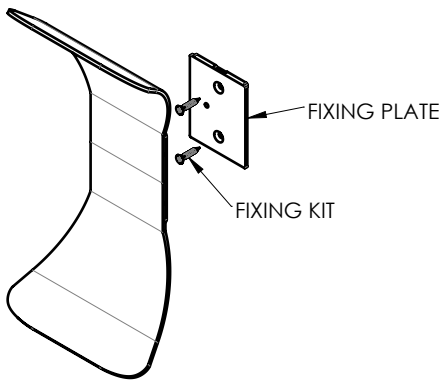

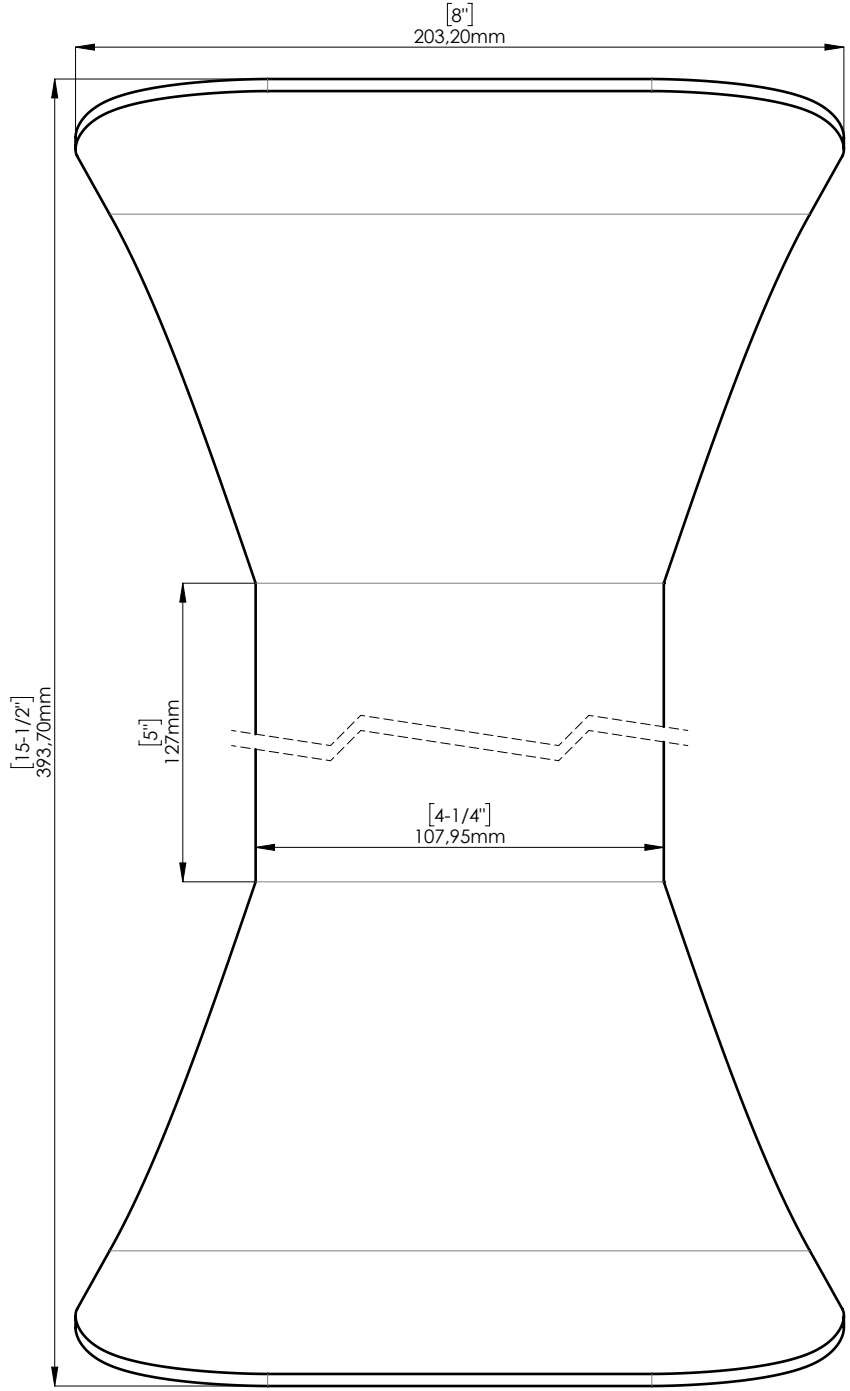

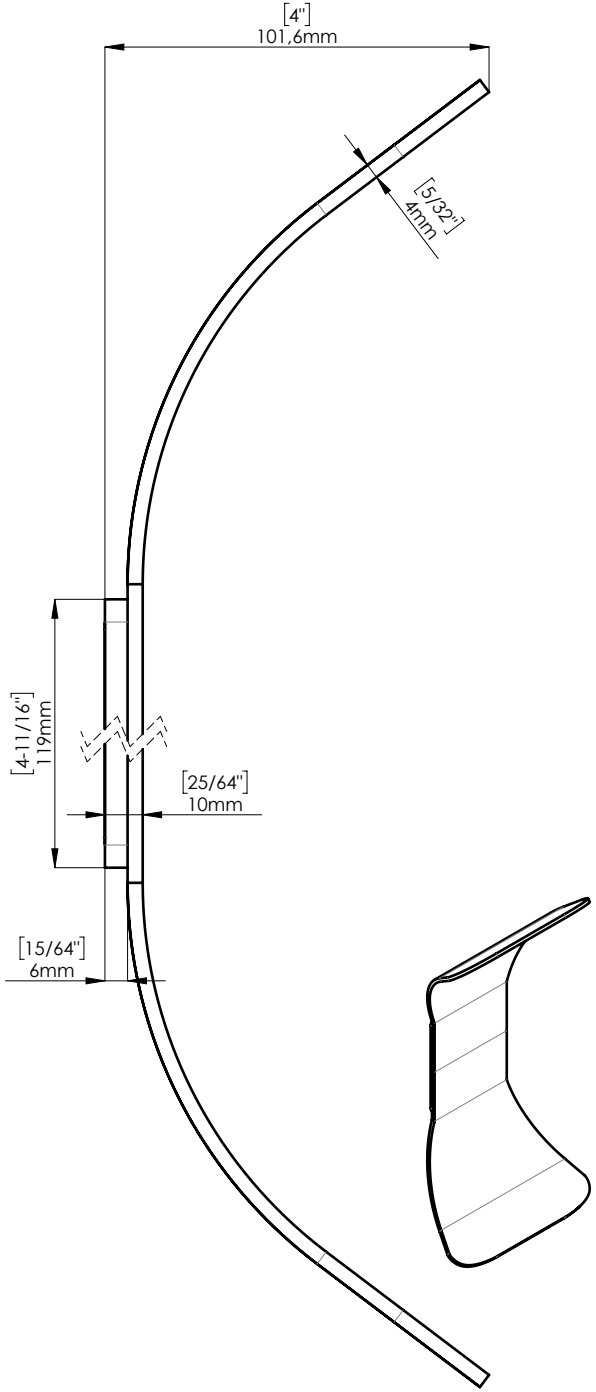

FIXING PLATE

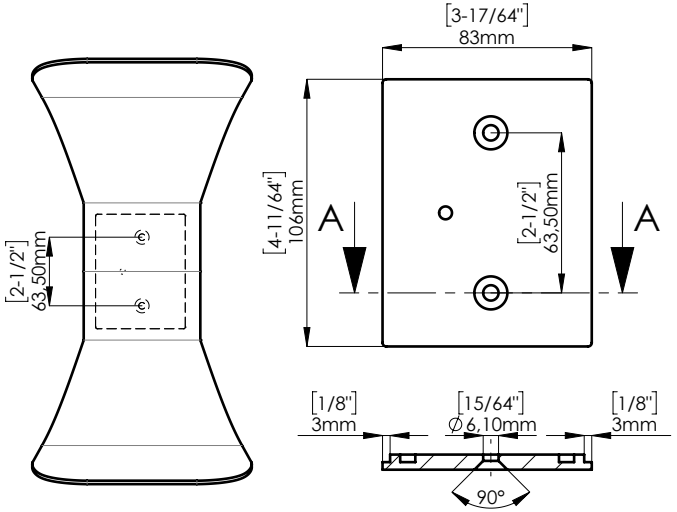

0 SHEET SCALE 1:1 50 100 mm