SHEET SCALE 1:1 | inches | SCALE 1:2 | DESCRIPTION | **SATIN STAINLESS STEEL ADJUSTABLE FOOT** | ITEM CODE **5CS.550.000U.44**

FIXING INCLUDED

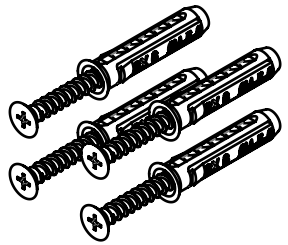

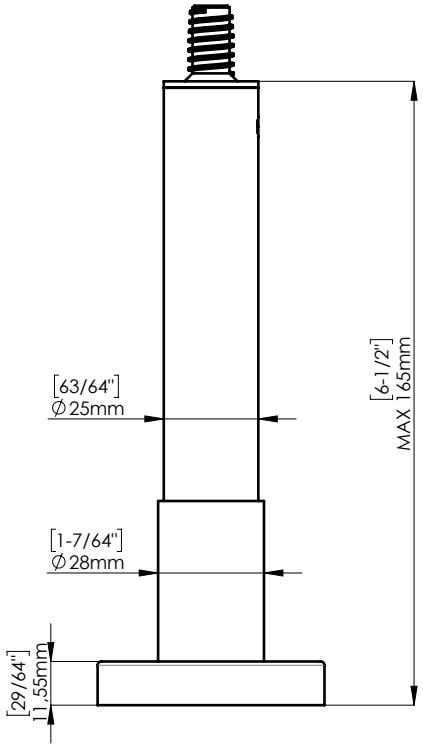

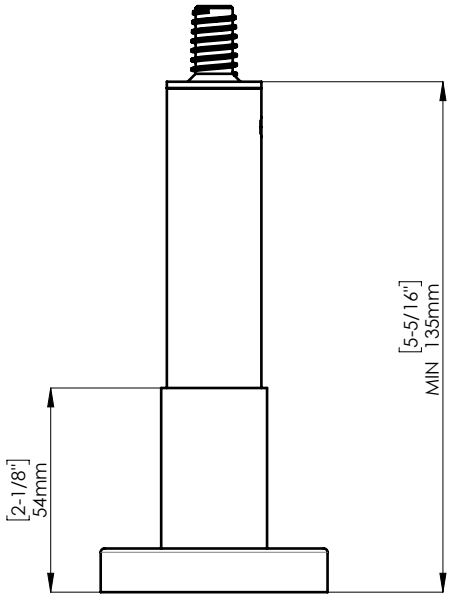

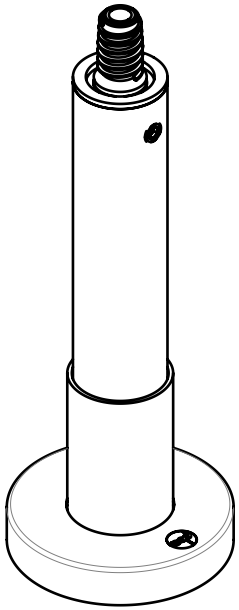

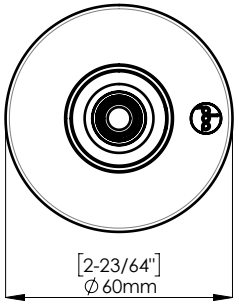

CONCEALED MOUNTING
FLANGE DETAIL

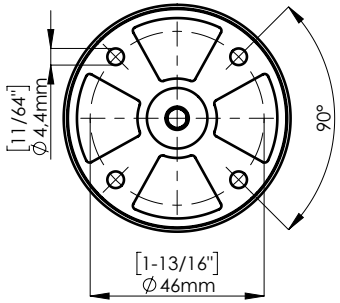

SHEET SCALE 1:1 | mm