SHEET SCALE 1:1 | SCALE 1:10 | DESCRIPTION **Ø1-17/64"(32 mm) STAINLESS STEEL SWING-UP GRAB BAR** | ITEM CODE **4CS.445.001U.44**

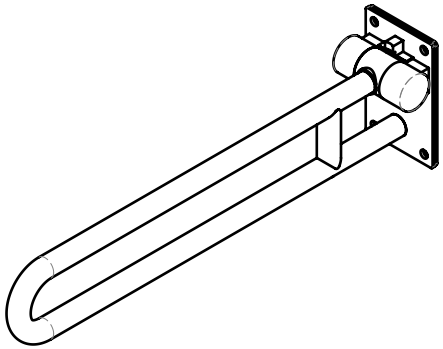

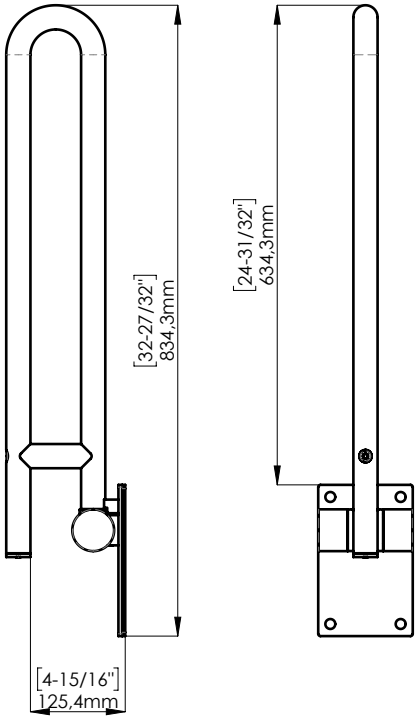

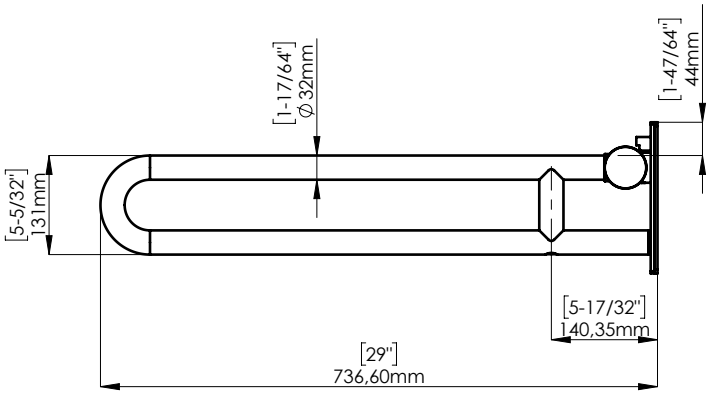

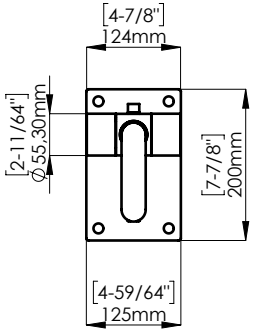

MOUNTING PLATE DETAIL

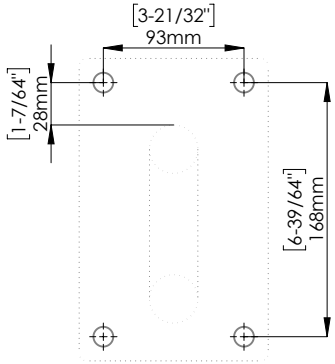

FIXING KIT NOT INCLUDED.

Mounting kit for plasterboard wall and wooden plate available. Others options available.

SHEET SCALE 1:1 (mm)