SHEET SCALE 1:1 | inches | SCALE 1:10 | DESCRIPTION **Ø1-17/64"(32 mm) SS CORNER SHOWER CURTAIN RAIL WITH CEILING SUPPORT** | ITEM CODE **4CS.436.0B3U.44**

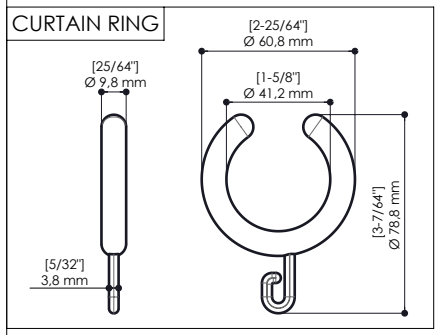

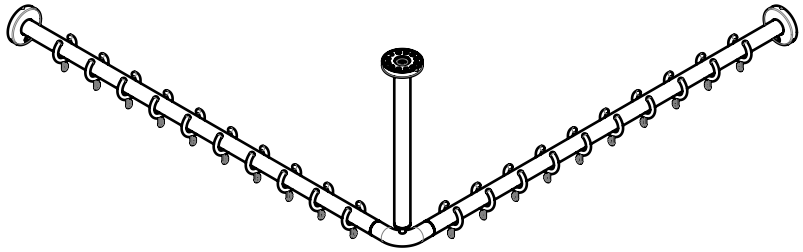

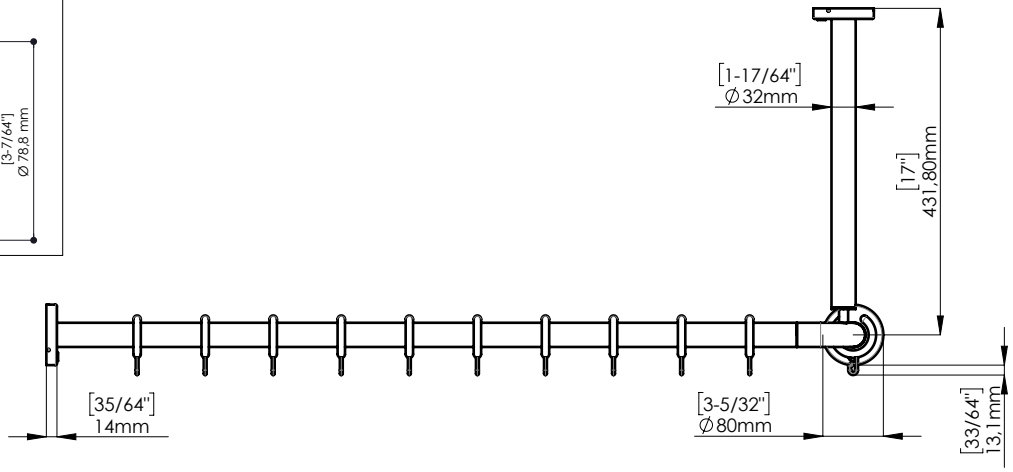

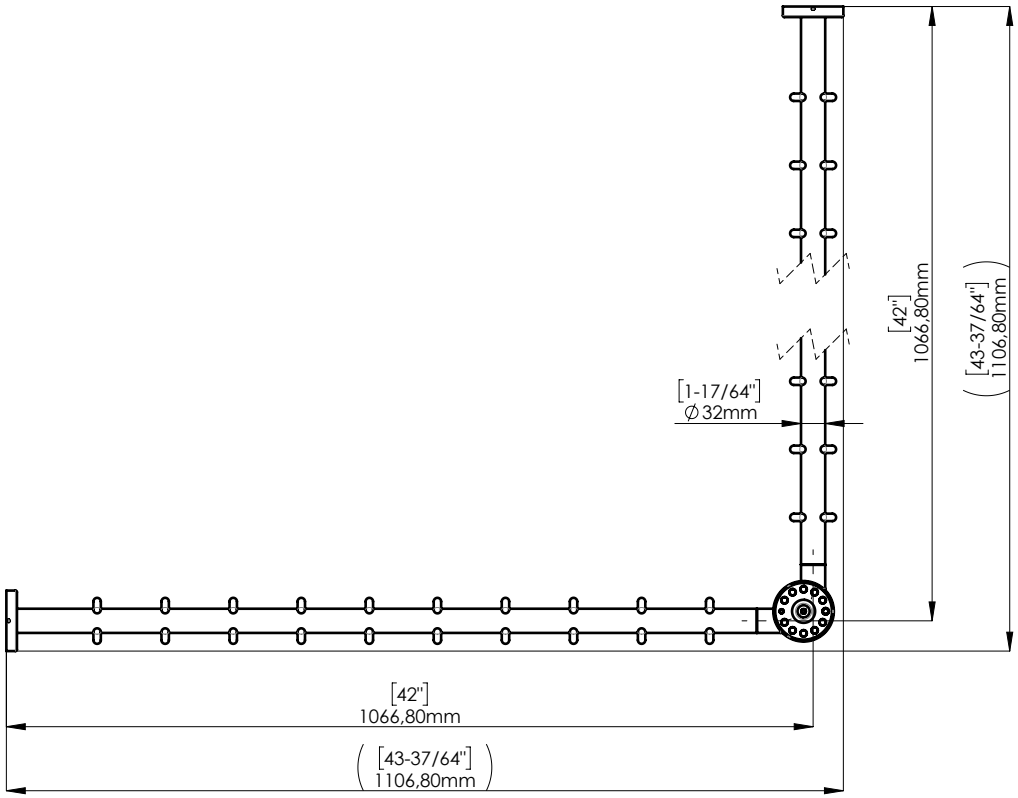

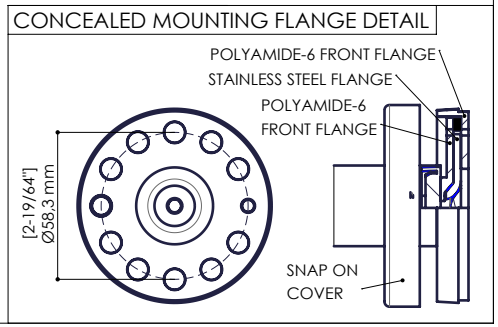

FIXING KIT NOT INCLUDED.

Mounting kit for plasterboard wall and wooden plate available. Other options available.

SHEET SCALE 1:1 | mm