SHEET SCALE 1:1 | inches | SCALE 1:10 | DESCRIPTION | **Ø1-7/16"(36 mm) PA-6 34" ROTATING SWING-UP GRAB BAR** | ITEM CODE **4CN.445.0R3U.01**

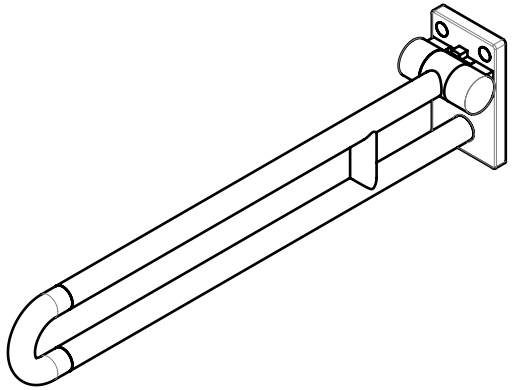

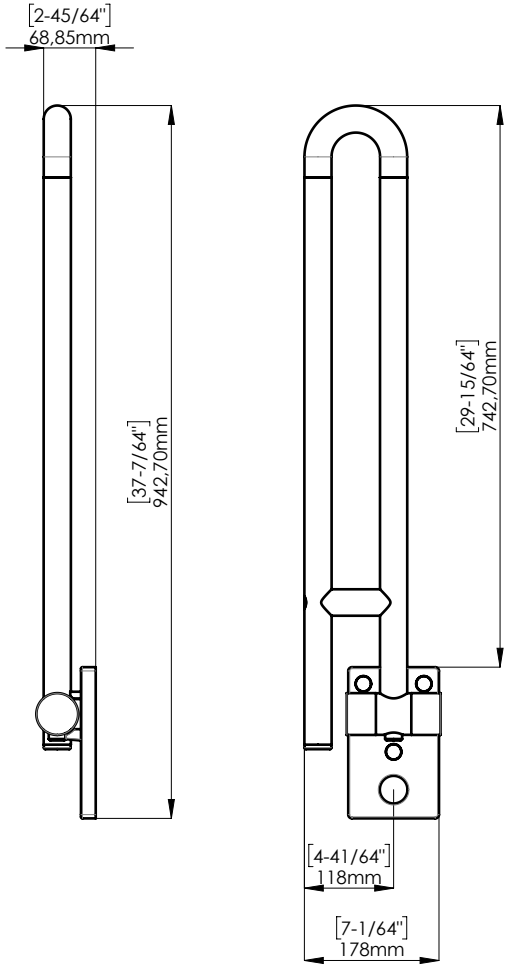

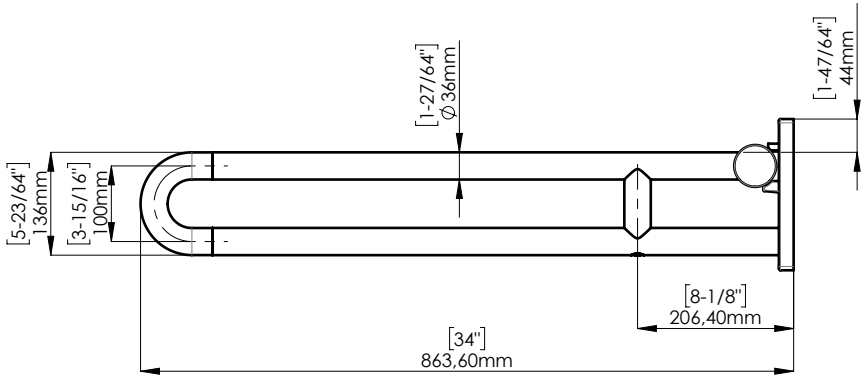

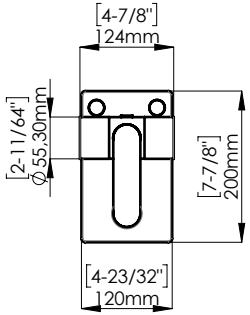

MOUNTING PLATE DETAIL

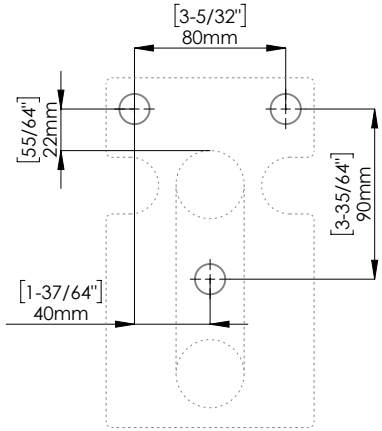

FIXING KIT NOT INCLUDED.

Mounting kit for plasterboard wall and wooden plate available. Others options available.

SHEET SCALE 1:1 | mm