SHEET SCALE 1:1 | 0 | 2 | inches | 4

SCALE 1:5	DESCRIPTION	Ø1-7/16"(36 mm) PA-6 WALL TO WALL SHOWER CURTAIN RAIL	ITEM CODE	4CN.429.002U.01

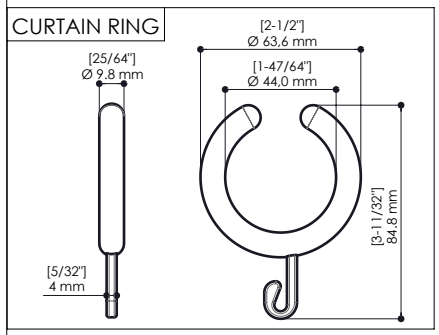

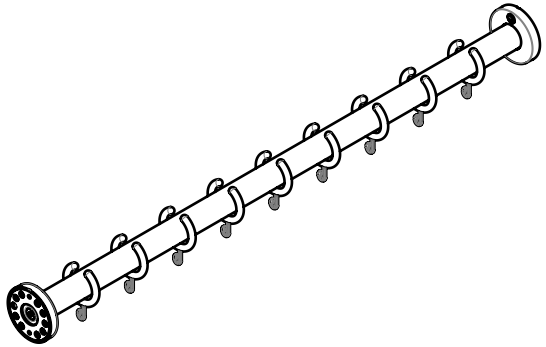

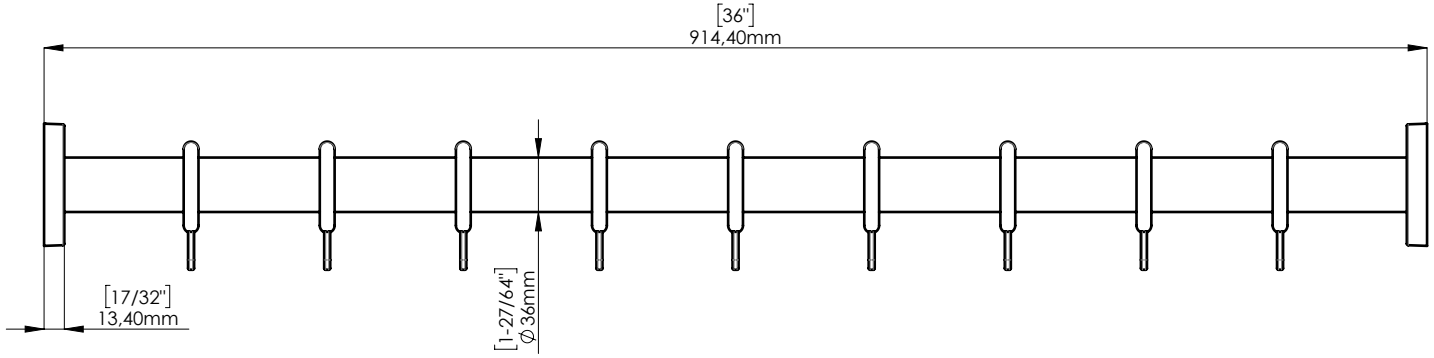

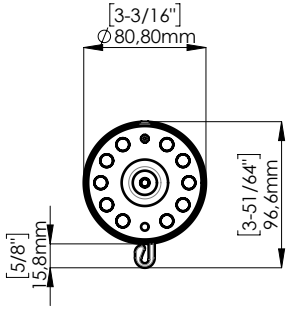

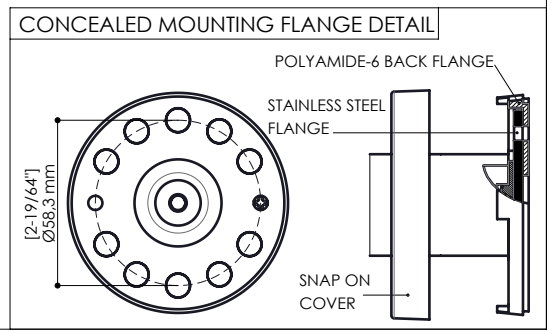

FIXING KIT NOT INCLUDED.

Mounting kit for plasterboard wall and wooden plate available. Other options available.

pba 0 SHEET SCALE 1:1 | 50 | 100 | mm