SHEET SCALE 1:1 | SCALE 1:5 | DESCRIPTION | **FLAT PULL HANDLE ART. 200P-011 SATINED** | ITEM CODE **2CP.011.0030.44**

FIXING KIT NOT INCLUDED - COMPATIBLE WITH **PBA FIXINGS I** -

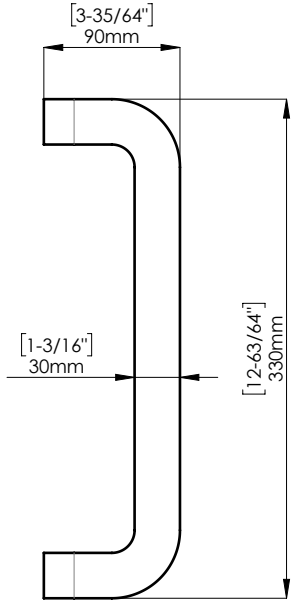

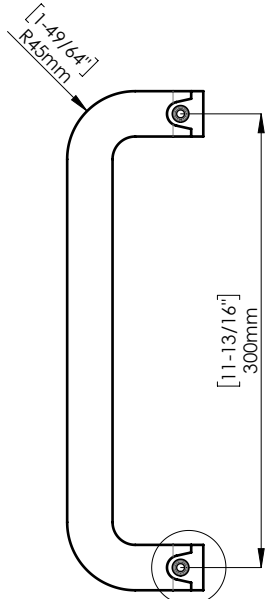

DOOR PREPARATION

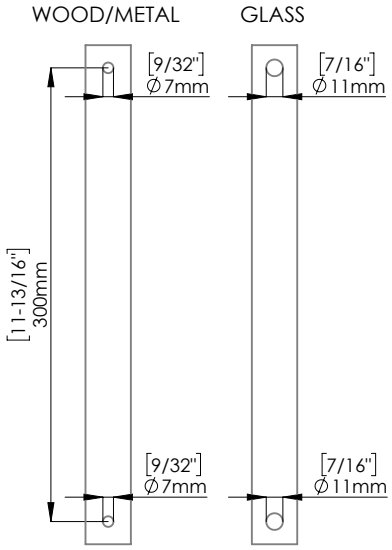

INCLUDED ACCESSORIES

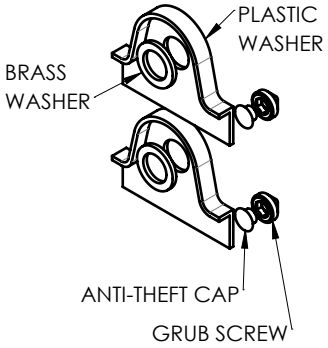

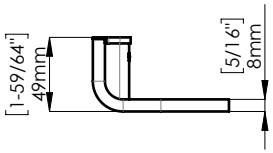

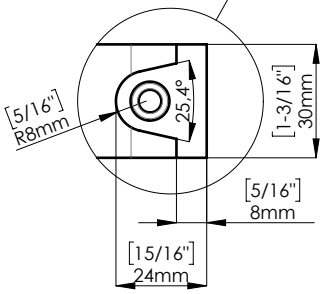

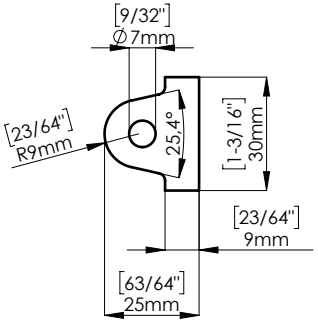

PLASTIC WASHER DETAIL

pba 0 SHEET SCALE 1:1 50 100 mm