pba

DESIGN FOR ALL 4CU

SANITARY | ACCESSORIES AND ACCESSIBILITY

MADE
IN ITALY

DESIGN.
FOR ALL
NORTH AMERICA

THE ***DESIGN FOR ALL*** BATHROOM ACCESSORIES PROGRAM DEMONSTRATES HOW ELEGANT, WELL-COORDINATED DESIGN CAN ELEVATE THE APPEARANCE AND PERFORMANCE OF ACCESSIBLE SPACES. SMARTLY DETAILED AND EXCEPTIONALLY WELL CRAFTED, EACH PRODUCT PROMOTES A LIFE WITHOUT BARRIERS AND SUPPORTS INCLUSION BEAUTIFULLY. PBA COLLABORATED WITH GENSLER, SERVING AS PRODUCT MERCHANDISING CONSULTANT, ON THE COMPLETE RANGE, WHICH IS SUITABLE FOR OFFICE, HOSPITALITY, RETAIL, HEALTHCARE, AND EDUCATION ENVIRONEMENTS.

DESIGN FOR ALL
4CU

COPPER

STAINLESS STEEL AISI 316L

ANTIMICROBIAL
COPPER

IN THE BEGINNING THERE IS LIGHT, THEN THE WARMTH OF SOFT BROWN TONES, AND FINALLY THE GROWTH OF GREEN. COPPER CHANGES THROUGH A RANGE OF COLOURS, BRINGING OBJECTS TO LIFE A THOUSAND TIMES. IT CHANGES SKIN, BUT THE STRENGTH TO RESIST INFECTIONS AND ATMOSPHERIC AGENTS LASTS FOREVER.

COPPER FACTS: ANTIMICROBIAL COPPER

HOSPITAL EQUIPMENT MADE FROM COPPER ALLOYS CAN PLAY AN IMPORTANT ROLE IN COMPLEMENTING TRADITIONAL METHODS OF DISINFECTION. STUDIES ON THE ANTIMICROBIAL PROPERTIES OF COPPER AND ITS ALLOYS HAVE BEEN CONDUCTED USING VARIOUS METHODS.

THE STUDY REPORTED IN THE INTERNATIONAL JOURNAL OF ENVIRONMENTAL RESEARCH AND PUBLIC HEALTH CONFIRMED THE ANTIMICROBIAL PROPERTIES OF COPPER ALLOYS, SHOWING THAT COPPER KILLS GREATER THAN 99.9% OF THE MOST COMMON BACTERIA WITHIN 2 HOURS OF EXPOSURE: METHICILLIN-RESISTANT STAPHYLOCOCCUS AUREUS (MRSA), VANCOMYCIN-RESISTANT ENTEROCOCCUS FAECALIS (VRE), STAPHYLOCOCCUS AUREUS, ENTEROBACTER AEROGENES, PSEUDOMONAS AERUGINOSA, AND E. COLI O157:H7.

THESE BACTERIA ARE CONSIDERED TO BE REPRESENTATIVE OF THE MOST DANGEROUS PATHOGENS CAPABLE OF CAUSING SEVERE AND OFTEN FATAL INFECTIONS. THE CENTERS FOR DISEASE CONTROL AND PREVENTION (CDC) ESTIMATES THAT INFECTIONS ACQUIRED IN U.S. HOSPITALS AFFECT TWO MILLION INDIVIDUALS EVERY YEAR AND RESULT IN NEARLY 100,000 DEATHS ANNUALLY.

THE USE OF COPPER ALLOYS FOR FREQUENTLY TOUCHED SURFACES, AS A SUPPLEMENT TO EXISTING CDC PRESCRIBED HAND-WASHING AND DISINFECTION REGIMENS, HAS FAR-REACHING IMPLICATIONS. POTENTIAL USES OF THE COPPER IT CAN HELP TO REDUCE THE AMOUNT OF DISEASE-CAUSING BACTERIA IN HEALTHCARE, PUBLIC SPACES AND GENERALLY IN HIGH ATTENDANCE FACILITIES INCLUDES DOOR AND FURNITURE HARDWARE.

THE NEW ENGLAND JOURNAL OF MEDICINE RECENTLY REPORTED THAT COPPER, WHEN COMPARED TO OTHER MATERIALS INCLUDING PLASTIC AND STAINLESS STEEL, IS ALSO DRAMATICALLY LESS HOSPITABLE TO VIRUS.

STAINLESS STEEL AISI 316L

PBA IS THE PREMIER BRAND OF AISI 316L STAINLESS STEEL, THE HARDEST, MOST RESISTANT AND ELASTIC STEEL. THE STAINLESS STEEL AISI 316L IS AN AUSTENITIC ALLOY. IT IS DISTINGUISHED FROM OTHERS INOXIDIZABLE STEELS BY THE HIGH PERCENTAGE OF MOLYBDENUM WHICH GIVES IT A SPECIAL RESISTANCE TO PITTING CORROSION AND STRESS CORROSION. IN THIS KIND OF STAINLESS STEEL THE NICKEL'S PRESENCE IS INCREASED IN ORDER TO GUARANTEE STABILITY. FURTHER, THE "L" STANDS FOR "LOW CARBON", AND, IN FACT, THE QUANTITY IS LESS THAN OR EQUAL TO 0,03%.

DESIGN FOR ALL 4CU

THE ***DESIGN FOR ALL 4CU*** IS DEDICATED TO THE HEALTH CARE INDUSTRY, BUT THE ELEGANCE OF THE DESIGNS AND THE MODERN COMBINATION BETWEEN COPPER AND STAINLESS STEEL MAKE IT SUITABLE FOR ALL APPLICATIONS .
THANKS TO THE ANTIBACTERIAL EFFICACY OF COPPER, THE QUALITY OF THE BEST DEGREE OF STAINLESS STEEL (316L), THE WIDE RANGE OF PRODUCTS AND THE TECHNICAL SOLUTION (FOR EASY INSTALLATION AND HIGH PERFORMANCE), THE DESIGN FOR ALL 4CU RANGE IS THE BEST SOLUTION FOR DIFFERENT PROJECTS: HEALTH CARE, HOSPITALS, PRIVATE CLINICS, OFFICES AND PUBLIC SPACES.

FINISH

AIDS

4R
Satin
Copper

Satin
Stainless Steel

ACCESSORIES

86
Satin Copper

MIRROR-HOLDER SUPPORTS

58
Semi-Bright
Copper Plated

ADA

PRODUCTS IN THIS COLLECTION WERE DESIGNED TO COMPLY WITH THE ADA AND SIMILAR ACCESSIBILITY REQUIREMENTS, HOWEVER FINAL INTERPRETATION OF ACCESSIBILITY COMPLIANCE IS THE RESPONSIBILITY OF THE SPECIFIER AND SHOULD BE DETERMINED ACCORDING TO SPECIFIC PROJECT CONDITIONS AND LOCAL CODES..

COLOR

OVER TIME COPPER WILL NATURALLY CHANGE COLORS – TRANSFORMING FROM A SHINY BROWN COLOR TO DARKER BROWNS, THEN BLUES AND FINALLY GREENS AFTER A NUMBER OF YEARS. THIS CHANGE IN COLOR DUE TO THE NATURAL OXIDATION DOESN'T AFFECT THE ANTIMICROBIAL ACTIVITY THAT REMAINS INTACT.

pba FOR LEED® CERTIFICATION

LEED® (LEADERSHIP IN ENERGY ENVIRONMENTAL DESIGN) IS A VOLUNTARY CERTIFICATION SYSTEM FOR THE MANAGEMENT, DESIGN AND CONSTRUCTION OF BUILDINGS THAT ARE SUSTAINABLE FROM A SOCIAL, ENVIRONMENTAL AND ECONOMIC POINT OF VIEW AND IN TERMS OF THE WELLBEING OF THE USERS.

pba PRODUCTS CONTRIBUTE TOWARD SATISFYING PREREQUISITES AND CREDITS UNDER LEED®.

INTEGRATED PROCESS	**IP**
MATERIALS AND RESOURCES	**MR**
INDOOR ENVIRONMENTAL QUALITY	**EQ**
INNOVATION	**I**

LEED® LEADERSHIP IN ENERGY ENVIRONMENTAL DESIGN

PBA LINES - CONTRIBUTION MATRIX TO LEED V4

CHART OF PBA PRODUCTS CONTRIBUTION TO LEED V4

INTEGRATIVE PROCESS

❑ IP	PREREQUISITIE	INTEGRATIVE PROCESS PLANNING AND DESIGN

MATERIALS AND RESOURCES

❑ MR	PREREQUISITE	CONSTRUCTION AND DEMOLITION WASTE MANAGEMENT PLANNING
❑ MR	CREDIT	CONSTRUCTION AND DEMOLITION WASTE MANAGEMENT
❑ MR	CREDIT	BUILDING PRODUCT DISCLOSURE AND OPTIMIZATION - SOURCING OF RAW MATERIALS ➔ OPTION 2 LEADERSHIP EXTRACTION PRACTICES
❑ MR	CREDIT	BUILDING PRODUCT DISCLOSURE AND OPTIMIZATION - MATERIAL INGREDIENTS ➔ OPTION 2 MATERIAL INGREDIENT OPTIMIZATION

INDOOR ENVIRONMENTAL QUALITY

❑ EQ	CREDIT	LOW EMITTING MATERIALS
❑ EQ	CREDIT	CONSTRUCTION AIR QUALITY MANAGEMENT PLAN

INNOVATION

❑ IN	PILOT CREDIT	DESIGN FOR FLEXIBILITY
❑ IN	PILOT CREDIT	SOCIAL EQUITY
❑ IN	PILOT CREDIT	INCLUSIVE DESIGN
❑ IN	CREDIT	DESIGN FOR DECONSTRUCTION

Mapping Your Green Products greenmap

MATERIALS

STAILESS STEEL

Chemical composition of AISI stainless steel grades

Material - Stainless steel	*C %*	*Cr %*	*Ni %*	*Mo %*
AISI 430 (1.4016)	0,12 max	14.0-18.0	/	/
AISI 304 (1.4301)	0,08 max	18.0-20.0	8.0-10.5	/
AISI 316 (1.4401)	0,08 max	16.0-18.0	10.0-14.0	2.00-3.00
AISI 316L (1.4404)*	**0,03 max**	**16.0-18.0**	**10.0-14.0**	**2.00-3.00**

***Standard pba**

Estimated pit corrosion time – time to penetrate 1 mm (years) by steel type:

Location - Stainless Steel	*Marine*	*Semi-industrial*	*Rural*
Stainless steel AISI 430 (1.4016)	N/A	85	250
Stainless steel AISI 304 (1.4301)	145	135	770
Stainless steel AISI 316 (1.4401)*	**260**	**525**	**1200**

Source: The British Stainless Steel Association [BSSA]

THE STAINLESS STEEL AISI 316L IS AN AUSTENITIC ALLOY. IT IS DISTINGUISHED FROM OTHERS INOXIDIZABLE STEELS BY THE HIGH PERCENTAGE OF MOLYBDENUM WHICH GIVES IT A SPECIAL RESISTANCE TO PITTING CORROSION AND STRESS CORROSION. IN THIS KIND OF STAINLESS STEEL, THE PERCENTAGE OF NICKEL IS INCREASED TO GUARANTEE STABILITY. FURTHER, THE “L” STANDS FOR LOW CARBON AND, IN FACT, THE QUANTITY IS LESS THAN OR EQUAL TO 0.03%. THIS FEATURE PROLONGS THE CHROME CARBIDE’S PRECIPITATION TIME AND AVOIDS THE RISK OF INTERGRANULAR CORROSION DURING THE WELDING PROCESS.

COPPER

Material	*U.S. EPA Classification*	*Thickness*	*Copper plating process*
CU ≥ 97%*	**Antimicrobial Copper Alloys - Group I**	**Min 8 µm**	**Copper Plating**

***Standard pba**

THE U.S. ENVIRONMENTAL PROTECTION AGENCY (EPA) HAS APPROVED THE REGISTRATION OF ANTIMICROBIAL COPPER ALLOYS WITH PUBLIC HEALTH CLAIMS. THESE PUBLIC HEALTH CLAIMS ACKNOWLEDGE THAT COPPER ALLOYS ARE CAPABLE OF KILLING HARMFUL, POTENTIALLY DEADLY BACTERIA. COPPER IS THE FIRST SOLID SU EPA REGISTRATION, WHICH IS SUPPORTED BY EXTENSIVE ANTIMICROBIAL EFFICACY TESTING.

*LABORATORY TESTING SHOWS THAT, WHEN CLEANED REGULARLY, ANTIMICROBIAL COPPER SURFACES KILL GREATER THAN 99.9% OF THE FOLLOWING BACTERIA WITHIN 2 HOURS OF EXPOSURE: MRSA, VRE, STAPHYLOCOCCUS AUREUS, ENTEROBACTER AEROGENES, PSEUDOMONAS AERUGINOSA, AND E. COLI O157:H7. ANTIMICROBIAL COPPER SURFACES ARE A SUPPLEMENT TO AND NOT A SUBSTITUTE FOR STANDARD INFECTION CONTROL PRACTICES AND HAVE BEEN SHOWN TO REDUCE MICROBIAL CONTAMINATION, BUT DO NOT NECESSARILY PREVENT CROSS CONTAMINATION OR INFECTIONS; USERS MUST CONTINUE TO FOLLOW ALL CURRENT INFECTION CONTROL PRACTICES.

MAINTENANCE

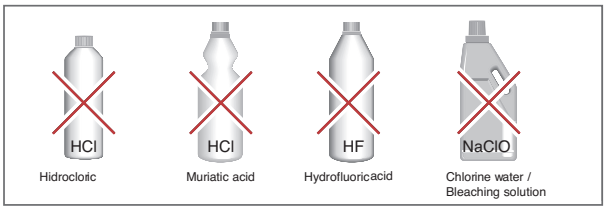

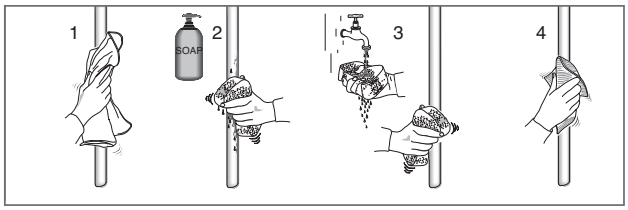

DO NOT USE: CHLORINE, WATER PLUS SALT SOLUTION, ACID OR ALCOHOLIC SOLUTION TO AVOID DAMAGING THE COPPER.

WARNINGS, CLEANING AND MAINTENANCE

ANY IMPERFECTIONS AND/OR DIFFERENCES IN THE SHAPE, FINISHES AND MATERIALS CAN BE ATTRIBUTED TO THE AUTOMATED AND/OR MANUAL OPERATIONS REQUIRED IN THE PRODUCTION PROCESS. FAILING TO COMPLY WITH THE INSTRUCTIONS, IMPROPER USE (E.G. USING AS A HANGER), DAMAGE CAUSED BY BLUNT AND/OR SHARP OBJECTS, LACK OF CARE IN USE (I.E. NOT USING A SUITABLE DOOR STOP), IMPROPER MAINTENANCE (E.G. CLEANING WITH POLISHING PRODUCTS THAT ARE ABRASIVE OR CONTAIN ALCOHOL, INSTEAD OF NEUTRAL SOAP), INTENSE USE (E.G. THE OPERATION ON DOORS WITH A VERY HIGH FREQUENCY OF USE), CAN CAUSE SCRATCHES, DENTS OR WEAR TO THE PRODUCTS WITH CORROSIVE RESULTS, FOR WHICH WE ASSUME NO RESPONSIBILITY.

STRUCTURAL ELEMENTS SAFETY BARS & EQUIPMENT

- Ø32 RAIL 1,5 mm THICK MADE OF COPPER
- BENDS IN STAINLESS STEEL AISI 316L
- STRAIGHT WALL SUPPORT IN STAINLESS STEEL AISI 316L.
- MOUNTING ROSES WITH STEEL CORE
- SCREWS, NUTS AND OTHER INNER PARTS ALL WITH ANTICORROSIVE COATING

RECYCLE

COPPER, STAINLESS STEEL AND OTHERS MATERIALS ARE COMPLETELY SEPARABLE FOR RECYCLE.

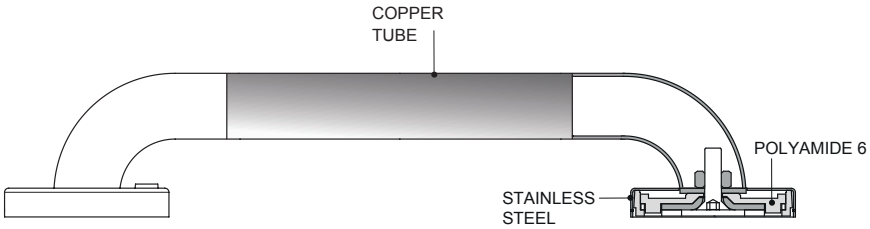

RAIL
RAIL IN COPPER,
Ø 32 MM, 15/10 THICKNESS.

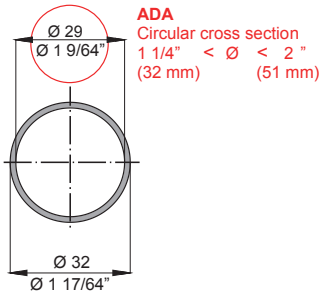

BEND 90°
BEND IN AISI 316L STAINLESS STEEL, Ø 32 MM,
15/10 THICKNESS, WITH THREADED INSERTS INSIDE.
CONNECTION BETWEEN RAIL AND FIXING FLANGE.

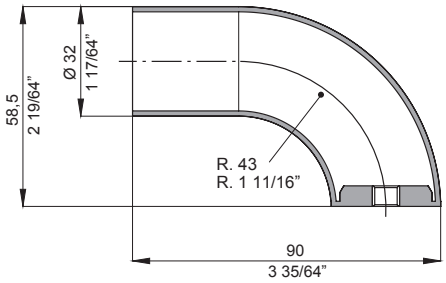

BEND 90°
BEND IN AISI 316L STAINLESS STEEL, Ø 32 MM, 15/10 THICKNESS. CONNECTION BETWEEN RAIL TO RAIL. Ø 32R. 1 11/16"R. 433 35/64"903 35/64"901 17/64"

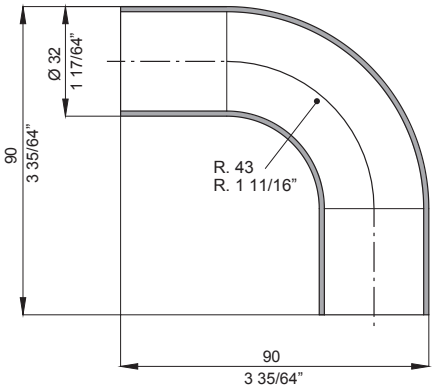

ROSE
FLANGE IN STEEL WITH HOLES FOR WALL MOUNTING, WITH POLYAMIDE 6 COVERING. SCREW-PLATE COVER IN AISI 316L STAINLESS STEEL.

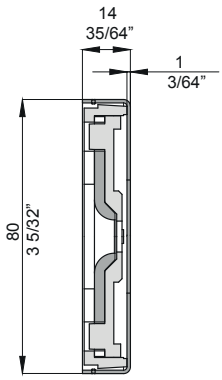

STRAIGHT SUPPORT
SUPPORT IN AISI 316L STAINLESS STEEL.

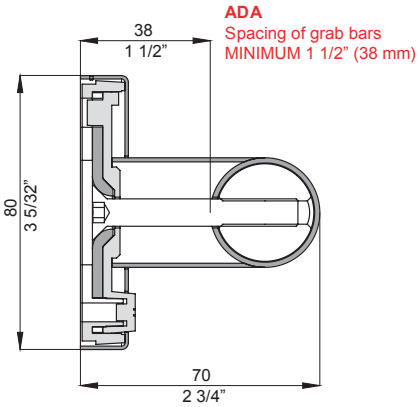

GRAB BARS PAGE 97

SHOWER SEATS PAGE 101

ACCESSORIES PAGE 105

TECHNICAL INFORMATION PAGE 113

ITEM Items code
Ø Diameter
α Angle

♦ Side: .1 Right
. 2 Left

ADA ADA

CODE'S STRUCTURE

000	.	000	.	0000	.	xx	.	x
PROGRAM		MODEL		TECHNICAL SPECIFICATIONS		FINISH		SIDE

GRAB BARS

90° GRAB BARS

page 98

HORIZONTAL GRAB BARS

page 99

TWO-WALL GRAB BARS

page 100

SHOWER SEATS

FOLDING SHOWER SEAT

page 102

FOLDING SHOWER SEAT

page 103

ACCESSORIES

VERTICAL SHOWER HEAD HOLDER RAIL

page 106

COPPER DOOR-STOP CLOTH HOOK

page 108

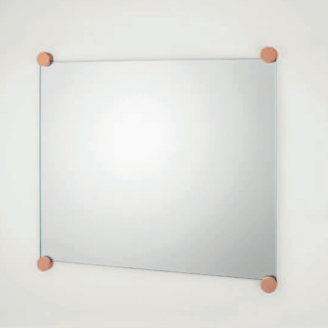

FIXED MIRROR WITH COPPER FINISH HOLDERS

page 107

COPPER PAPER ROLL HOLDER

page 109

COPPER PAPER ROLL HOLDER

page 110

GRAB BARS

ADA

◆ RIGHT

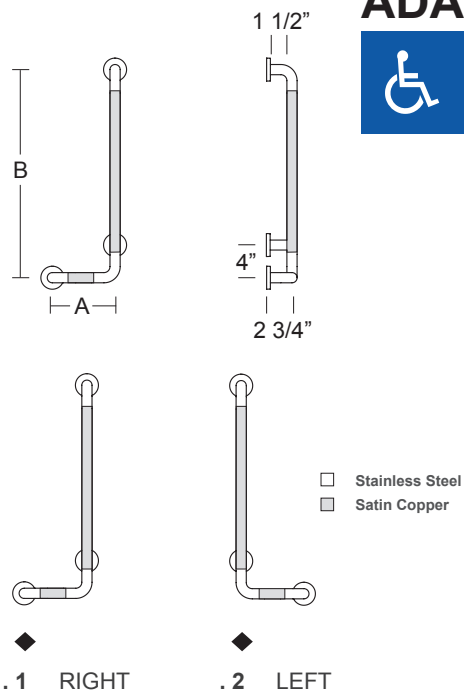

Dimensions: center to center

ITEM ◆	A	B
4CU.422.001U .4R . x	18”	24”
4CU.422.002U .4R . x	18”	36”
4CU.422.003U .4R . x	24”	24”
4CU.422.004U .4R . x	24”	36”
4CU.422.005U .4R . x	30”	24”
4CU.422.006U .4R . x	30”	30”
4CU.422.007U .4R . x	30”	36”

Concealed mounting flange in stainless steel

90° GRAB BAR
Rail 1/16” (1,5 mm) thick, in pure copper alloy CU-DHP (CW024A) with 1-17/64” (32 mm) outer diameter. Stainless steel bends connected with 3-3/16” (Ø 80 mm) flanges.
Cover in type 316L stainless steel. Mounting flanges with steel core 1/8” (3 mm) thickness, stainless steel covers and fully recyclable polyamide-6 wall protection. Each cover snaps over mounting flange to conceal mounting screws.
Clearance between the grab bar and wall is 1-1/2” (38 mm).

For strength installation and maintenance see page 91.

MOUNTING KITS not included.
Optional mounting kit for concrete, natural stone, solid brick and hollow brick: KIT 4CN.0VM.0004.00.
Optional mounting kit for sheetrock wall and wooden plate: KIT 4CN.0VM.0010.00.
Optional mounting kit for toilet partition: KIT 4CN.0VM.0040.00.
One Mounting kit is required for each flange - see page 114.

SAFETY WARNING
Grab bars must be firmly secured to the anchors and the walls in order for them to support the weight they are designed for. Grab bars alone are not stronger than anchors and walls. In case the grab bar is not securely anchored to the wall, the building owner or maintenance personnel must remove it from service to avoid any accident or injury.

SUSTAINABILITY
This product contributes to LEED® credits

COPPER

.XX FINISH	**.4R**
.4R SATIN COPPER	
SATIN STAINLESS STEEL	

see Technical Data Sheet for load capacity

ADA

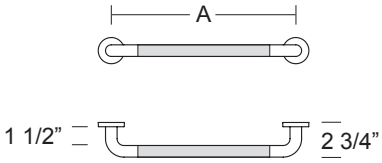

Stainless Steel
Satin Copper

Dimensions: center to center

ITEM	A
4CU.440.001U .4R	12”
4CU.440.002U .4R	16”
4CU.440.003U .4R	18”
4CU.440.004U .4R	24”
4CU.440.005U .4R	30”
4CU.440.006U .4R	32”
4CU.440.007U .4R	36”

Concealed mounting flange in stainless steel

HORIZONTAL GRAB BAR
Rail 1/16” (1,5 mm) thick, in pure copper alloy CU-DHP (CW024A) with 1-17/64” (32 mm) outer diameter. Stainless steel bends connected with 3-3/16” (Ø 80 mm) flanges.
Cover in type 316L stainless steel. Mounting flanges with steel core 1/8” (3 mm) thickness, stainless steel covers and fully recyclable polyamide-6 wall protection. Each cover snaps over mounting flange to conceal mounting screws.
Clearance between the grab bar and wall is 1-1/2” (38 mm).

For strength installation and maintenance see page 91.

MOUNTING KITS not included.
Optional mounting kit for concrete, natural stone, solid brick and hollow brick: KIT 4CN.0VM.0004.00.
Optional mounting kit for sheetrock wall and wooden plate: KIT 4CN.0VM.0010.00.
Optional mounting kit for toilet partition: KIT 4CN.0VM.0040.00.
One Mounting kit is required for each flange - see page 114.

SAFETY WARNING
Grab bars must be firmly secured to the anchors and the walls in order for them to support the weight they are designed for. Grab bars alone are not stronger than anchors and walls. In case the grab bar is not securely anchored to the wall, the building owner or maintenance personnel must remove it from service to avoid any accident or injury.

SUSTAINABILITY
This product contributes to LEED® credits

COPPER

.XX FINISH	**.4R**
.4R SATIN COPPER	
SATIN STAINLESS STEEL	

see Technical Data Sheet for load capacity

ADA

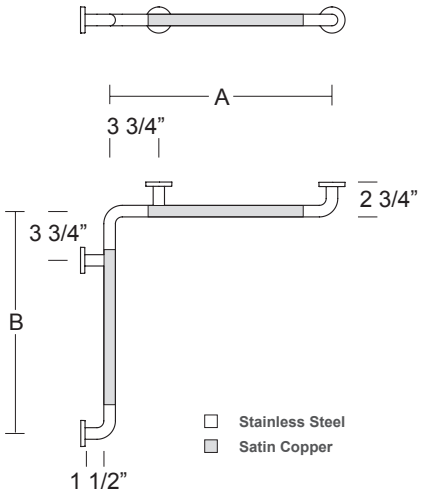

Dimensions: center to center

ITEM	A	B
4CU.442.001U .4R	24 3/4”	36 3/4”

Concealed mounting flange in stainless steel

TWO-WALL GRAB BAR
Rail 1/16” (1,5 mm) thick, in pure copper alloy CU-DHP (CW024A) with 1-17/64” (32 mm) outer diameter. Stainless steel bends connected with 3-3/16” (Ø 80 mm) flanges.
Cover in type 316L stainless steel. Mounting flanges with steel core 1/8” (3 mm) thickness, stainless steel covers and fully recyclable polyamide-6 wall protection. Each cover snaps over mounting flange to conceal mounting screws.
Clearance between the grab bar and wall is 1-1/2” (38 mm).

For strength installation and maintenance see page 91.

MOUNTING KITS not included.
Optional mounting kit for concrete, natural stone, solid brick and hollow brick: KIT 4CN.0VM.0004.00.
Optional mounting kit for sheetrock wall and wooden plate: KIT 4CN.0VM.0010.00.
Optional mounting kit for toilet partition: KIT 4CN.0VM.0040.00.
One Mounting kit is required for each flange - see page 114.

SAFETY WARNING
Grab bars must be firmly secured to the anchors and the walls in order for them to support the weight they are designed for. Grab bars alone are not stronger than anchors and walls. In case the grab bar is not securely anchored to the wall, the building owner or maintenance personnel must remove it from service to avoid any accident or injury.

SUSTAINABILITY
This product contributes to LEED® credits

COPPER

.XX FINISH	.4R
.4R SATIN COPPER	
SATIN STAINLESS STEEL	

see Technical Data Sheet for load capacity

SHOWER SEATS

ADA

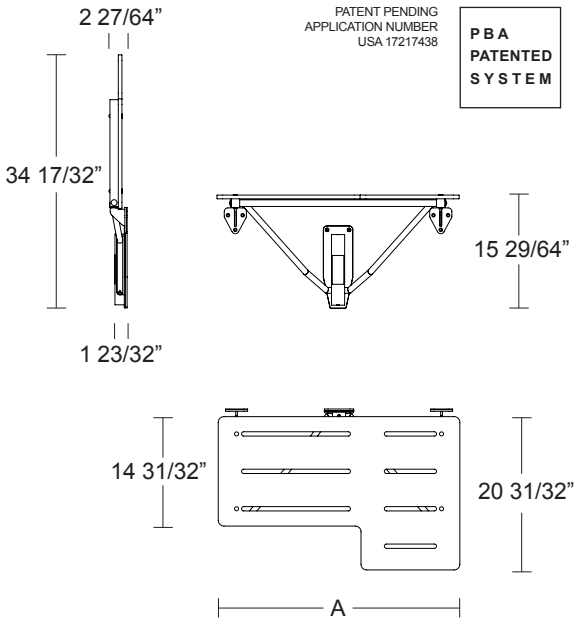

PATENT PENDING
APPLICATION NUMBER
USA 17217438

PBA PATENTED SYSTEM

ITEM	A
4CS.447.UL01 . xx	21”
4CS.447.UL02 . xx	27”
4CS.447.UL03 . xx	33”

see Technical Data Sheet for load capacity

FOLDING SHOWER SEAT
Seat ½” (13 mm) thick solid high pressure laminated (HPL) with slots for water drainage, connected to frame with type-316 stainless steel bolts. Reversible for left / right installation on site.
Frame type-316L satin finish stainless steel 1-1/4” (30 mm) square tube connected with 25/32” (20 mm) diameter tube.
Mounting flanges and Guide Bracket in type-316L satin finish stainless steel 15/64” (6 mm) thick with fully recyclable polyamide-6 wall protection. 9 screw holes for attachment to wall.
Adjustable frictioning system.

MOUNTING KITS not included.
Optional mounting kit for concrete, natural stone, solid brick and hollow brick: KIT 4CN.0VM.0042.00.
Optional mounting kit for sheetrock wall and wooden plate: KIT 4CN.0VM.0043.00.

SUSTAINABILITY
This product contributes to LEED® credits

STAINLESS STEEL AISI 316L

.XX FINISH	.44	.43
.44 SATIN		
.43 BRIGHT		
LRV light reflectance value	53	70

SEAT

STANDARD FINISH
WHITE
BLACK

Other colors on request - minimum quantity required

ADA

PATENT PENDING
APPLICATION NUMBER
USA 17217438

PBA
PATENTED
SYSTEM

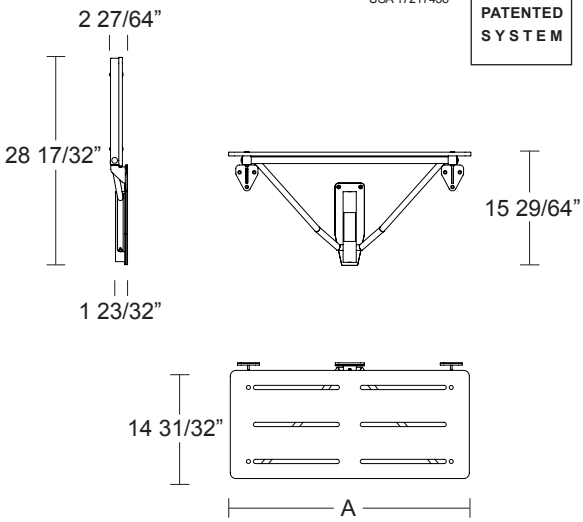

ITEM	A
4CS.447.UR01 . xx	21”
4CS.447.UR02 . xx	27”
4CS.447.UR03 . xx	33”

see Technical Data Sheet for load capacity

FOLDING SHOWER SEAT
Seat ½” (13 mm) thick solid high pressure laminated (HPL) with slots for water drainage, connected to frame with type-316 stainless steel bolts.
Frame type-316L satin finish stainless steel 1-1/4” (30 mm) square tube connected with 25/32” (20 mm) diameter tube.
Mounting flanges and Guide Bracket in type-316L satin finish stainless steel 15/64” (6 mm) thick with fully recyclable polyamide-6 wall protection. 9 screw holes for attachment to wall.
Adjustable frictioning system.

MOUNTING KITS not included.
Optional mounting kit for concrete, natural stone, solid brick and hollow brick: KIT 4CN.0VM.0042.00.
Optional mounting kit for sheetrock wall and wooden plate: KIT 4CN.0VM.0043.00.

SUSTAINABILITY
This product contributes to LEED® credits

STAINLESS STEEL AISI 316L

.XX FINISH	.44	.43
.44 SATIN		
.43 BRIGHT		
LRV light reflectance value	53	70

SEAT

STANDARD FINISH
WHITE
BLACK

Other colors on request - minimum quantity required

HPL SEAT PANEL FOR 316L STAINLESS STEEL 4CS SEAT

STANDARD COLORS

White Megeve

Black

AVAILABLE COLORS (minimum quantity requested)

Anise Flower

Green Apple

Cactus

Bali Green

Imperial Green

Teal Green

Caviar

Storm Gray

Lemon Zest

Broom

Vinyl

Florida

Nasturtium

Red Amaranth

Mink Gray

Moon Stone

Sambra Yellow

Fatal Red

Red Cherry

Indian Pink

Pink Bougainvillea

Cyclamen

Nutmeg

Natural Beige

Velvet Blue

Thistle

Indigo Zest

Oslo Blue

Flash Blue

Caribbean Blue

Ash Gray

Pearl Gray

Emerald

Mousse

Celadon

Big Blue

Turquoise

Batik Blue

Paloma Gray

Dove Gra

Cocco Zest

Blue Mist

Egg Shell

Orgeat

White Menuires

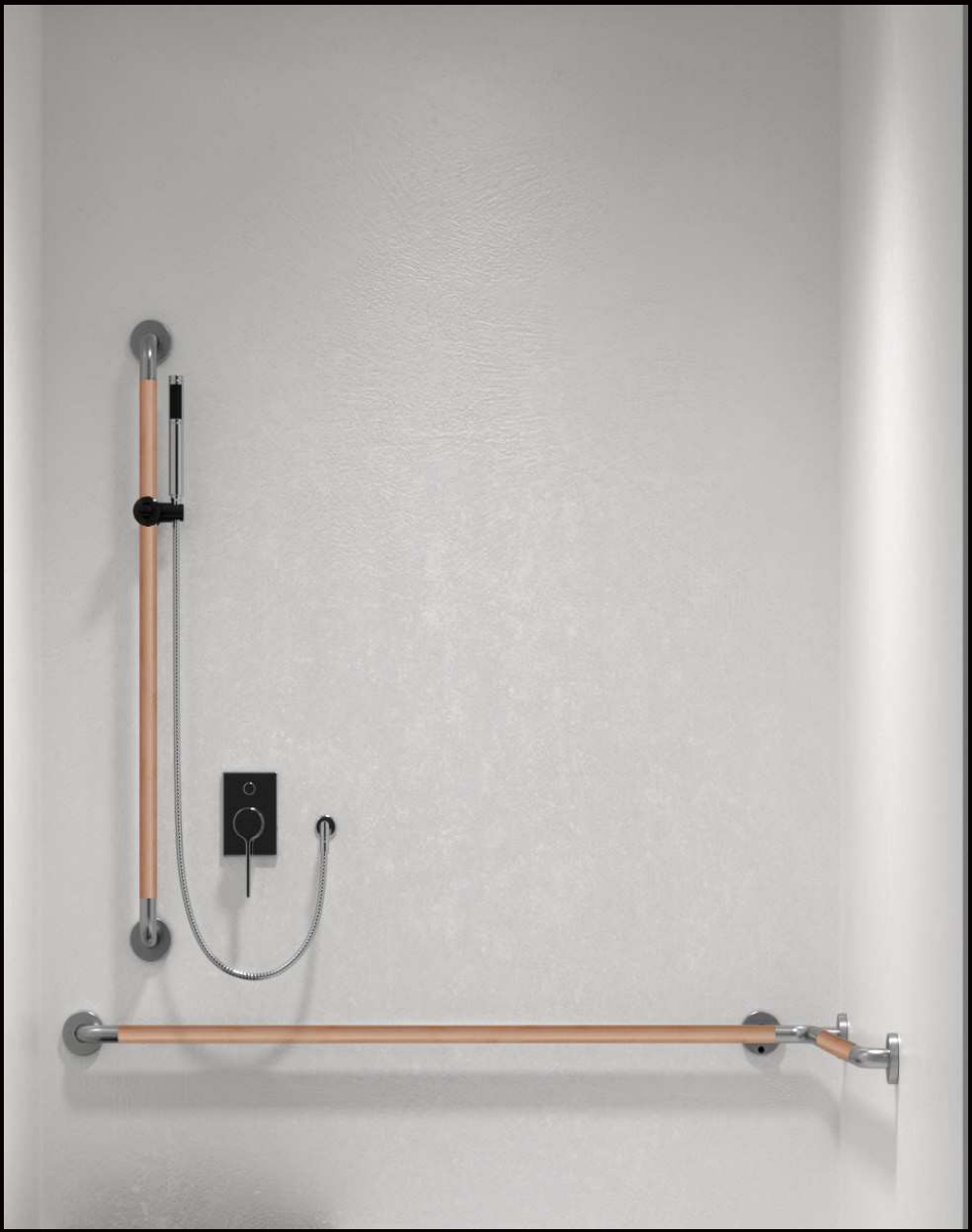

ACCESSORIES

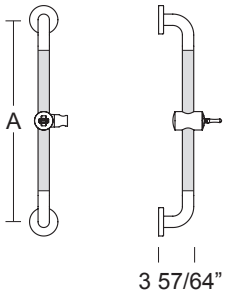

Stainless Steel
Satin Copper

Dimensions: center to center

ITEM	A
4CU.487.001U .4R	18”
4CU.487.002U .4R	24”
4CU.487.003U .4R	30”
4CU.487.004U .4R	36”
4CU.487.005U .4R	42”

SPARE PART

4CS.487.00RD . xx
Shower head hoder

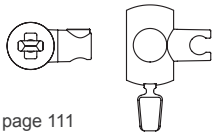

page 111

Concealed mounting flange in stainless steel

VERTICAL SHOWER HEAD HOLDER RAIL
Rail 1/16” (1,5 mm) thick, in pure copper alloy CU-DHP (CW024A) with 1-17/64” (32 mm) outer diameter. Stainless steel bends connected with 3-3/16” (Ø 80 mm) flanges.
Cover in type 316L stainless steel. Mounting flanges with steel core 1/8” (3 mm) thickness, stainless steel covers and fully recyclable polyamide-6 wall protection. Each cover snaps over mounting flange to conceal mounting screws.
Adjustable fully recyclable polyamide-6 shower head holder included.

MOUNTING KITS not included.
Optional mounting kit for concrete, natural stone, solid brick and hollow brick: KIT 4CN.0VM.0004.00.
Optional mounting kit for sheetrock wall and wooden plate: KIT 4CN.0VM.0010.00.
One Mounting kit is required for each flange - see page 114.

SUSTAINABILITY
This product contributes to LEED® credits

COPPER

.XX	**FINISH**	**.4R**
.4R	SATIN COPPER	
	SATIN STAINLESS STEEL	

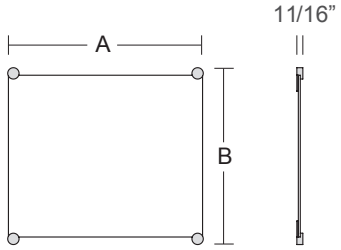

Semi-Bright Copper Plated

ITEM	A	B
4CU.490.000R .58	23 5/8”	21 21/32”
4CU.490.00QR .58	23 5/8”	27 9/16”
4CU.490.00AR .58	23 5/8”	39 3/8”

SPARE PART

4CS.490.0WHR. xx
Kit mirror-holder supports

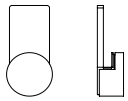

page 111

FIXED MIRROR WITH COPPER FINISH HOLDERS
Crystal glass 15/64” (6 mm) thickness mirror pane attached to wall with 4 fully recyclable polyamide-6 wall supports included.
Copper finish caps to conceal fixing screws.
Mounting kit for solid brick / concrete included.

SUSTAINABILITY
This product contributes to LEED® credits

COPPER

.XX	**FINISH**	**.58**
.58	SEMI-BRIGHT COPPER PLATED	

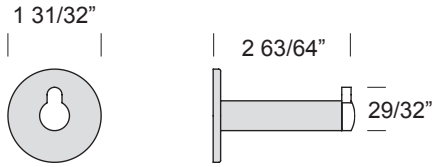

Satin Copper

ITEM

5CU.562.0000 .86

COPPER DOOR-STOP CLOTH HOOK
Copper Ø29/32” (23 mm) hook / door stop with black rubber cap.
Copper Ø1-31/32” (Ø 50 mm) flange.

SUSTAINABILITY
This product contributes to LEED® credits

COPPER

.XX FINISH	**.86**
.86 SATIN COPPER	

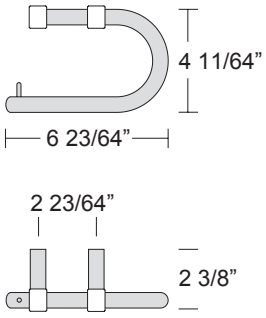

Satin Copper

ITEM

4CU.481.000H .86

COPPER PAPER ROLL HOLDER
Copper bent tube and wall support Ø5/8” (16 mm) outer diameter. Copper wall support and roll stop.
Mounting kit for solid brick / concrete included.

SUSTAINABILITY
This product contributes to LEED® credits

COPPER

.XX FINISH	**.86**
.86 SATIN COPPER	

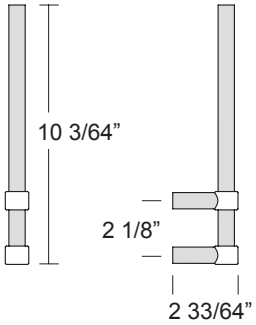

Satin Copper

ITEM

4CU.481.00RL .86

COPPER PAPER ROLL HOLDER
Copper tube and wall support Ø5/8” (16 mm) outer diameter. Copper wall support.
Mounting kit for solid brick / concrete included.

SUSTAINABILITY
This product contributes to LEED® credits

COPPER

.XX FINISH	**.86**
.86 SATIN COPPER	

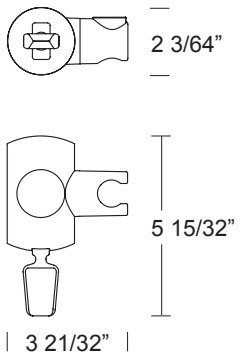

ITEM

4CS.487.00RD.17

SHOWER HEAD HOLDER
Shower head holder in polyamide-6, adjustable in height and inclination, can be used one-handed with the control lever. Compatible with the PROGRAMMA 4CS rails.

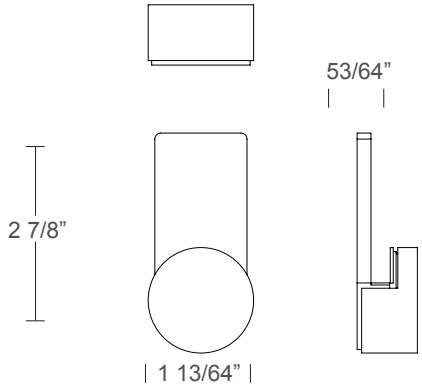

ITEM

4CS.490.0WHR.xx

SPARE STAINLESS STEEL HOLDERS FOR FIXED MIRROR
Set of 4 fully recyclable polyamide-6 wall supports with stainless steel caps for fixed mirror.

SUSTAINABILITY
These products contribute to LEED® credits

TECHNICAL INFORMATION

GRAB BAR INSTALLATION

Provide concealed anchor device or backing as specified or required in accordance with local building codes before wall is finished.
Fasten concealed mounting flanges to anchor device or backing with three screws in each flange.
Concealed anchor devices and mounting screws are not included with PBA grab bars and must be specified as optional mounting kit.

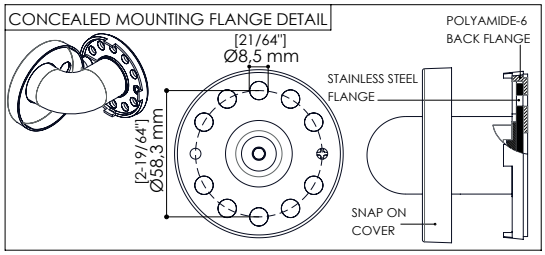

AVAILABLE MOUNTING KITS:

4CN.0VM.0004.00

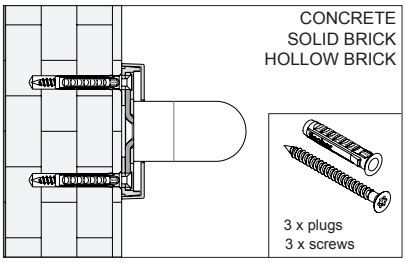

4CN.0VM.0010.00

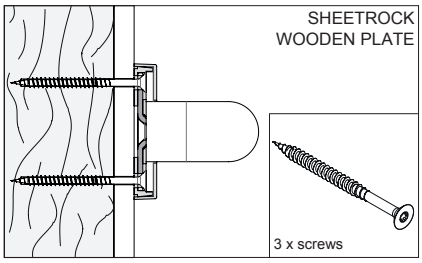

4CN.0VM.0040.00

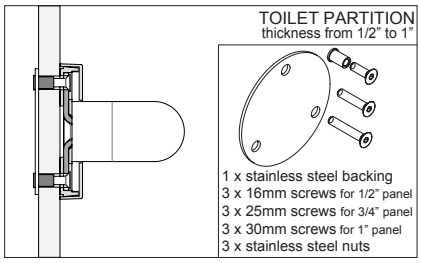

INSTALLATION ON WALL WITH PBA KIT 4CN.0VM.0004.00

Place grab bar in desired mounting location. Use mounting flanges as a template to mark location of mounting screws. Mark screw location for each mounting flange and remove grab bar from wall. Drill Ø5/16" (8 mm) and insert plugs. Place grab bar and drive mounting screws into plugs and secure tightly. Press all snap-flange covers into place to conceal mounting flanges.

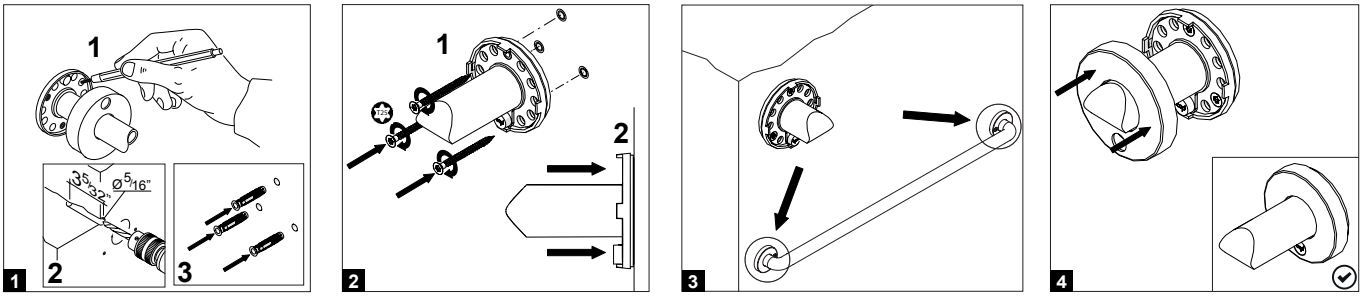

INSTALLATION ON WALL WITH PBA KIT 4CN.0VM.0010.00

Place grab bar in desired mounting location. Drive mounting screws in each flange and secure tightly. Press all snap-flange covers into place to conceal mounting flanges.

INSTALLATION ON TOILET PARTITION WITH PBA 4CN.0VM.0040.00

Using grab bar as a template and stainless steel backing to find holes position, mark toilet partition panel . Drill Ø5/16" (8 mm) holes for connectors. Insert connectors through backplate and into holes in panel. Secure grab bar to connectors using screws furnished by manufacturer. Press all snap-flange covers into place to conceal mounting flanges.

CLEANING AND MAINTENANCE

DO NOT USE abrasive liquid detergents

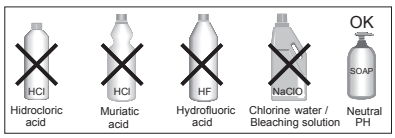

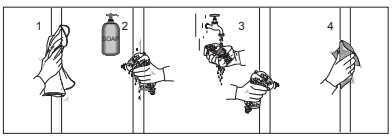

The illustrations and descriptions herein are applicable to production as of the date of Document.
The manufacturer reserves the right to make changes and improvements in designs and dimensions.
REV 01/2020©2020 by PBA S.p.A.

center to center dimensions

FOLDING SHOWER SEAT
MOUNTING INSTRUCTIONS

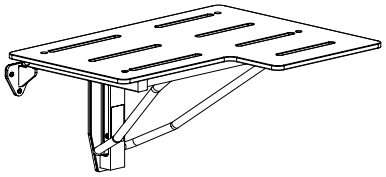

ITEM

FOLDING SHOWER SEAT

4CS.447

CONCRETE, NATURAL STONE,
SOLID BRICK, HOLLOW BRICK

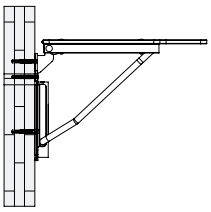

KIT 4CN.0VM.0042.00

Included:
9 x plugs
9 x screws

SHEETROCK WALL,
WOODEN PLATE

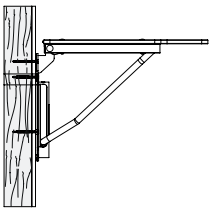

KIT 4CN.0VM.0043.00

Included:
9 x screws

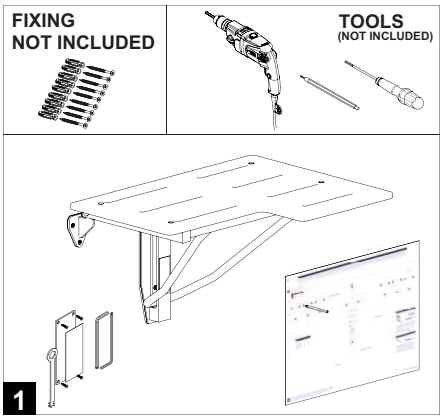

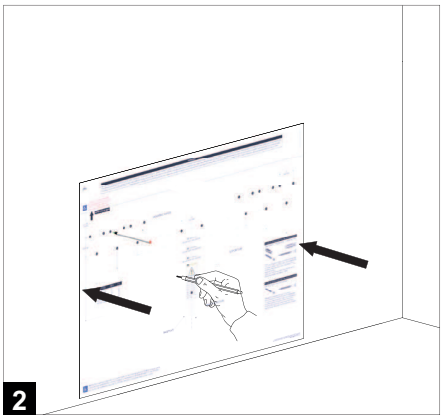

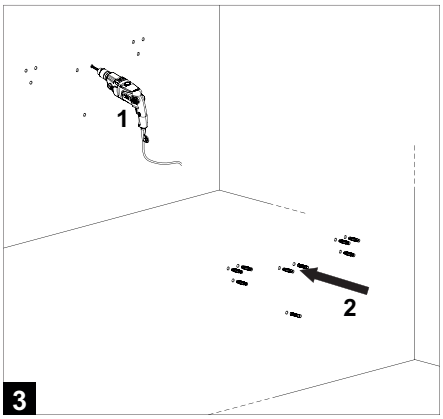

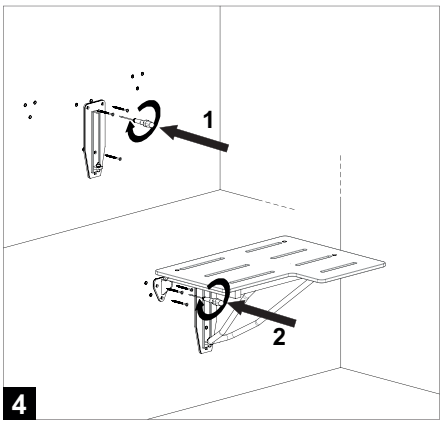

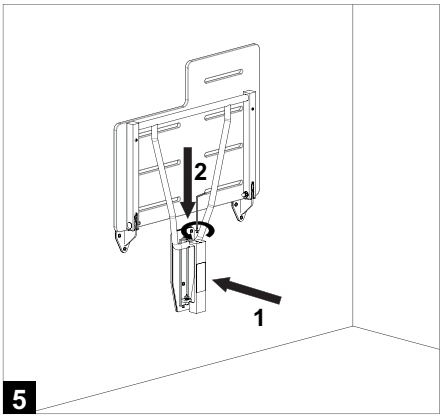

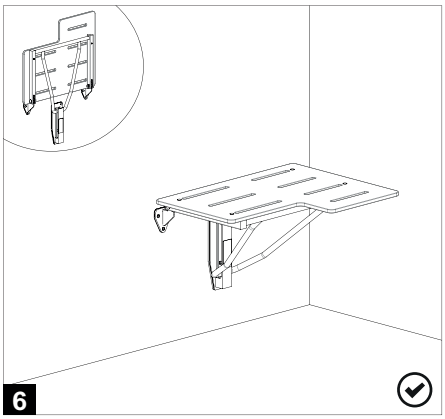

center to center dimensions

GENERAL CONDITIONS OF SALE

1. AGREEMENT
1.1 The supply of the products shown in this pricelist ("Products") of PBA SpA ("PBA") shall be governed by these general conditions of sale ("General Conditions").These General Conditions shall apply also to the sale of spare parts, when possible.
1.2 The sale agreement of the Products ("Agreement") is entered into force among the parties upon the Client's receipt of PBA's order confirmation.
These General Conditions shall be deemed as an integral and essential part of any Agreement.
1.3 These General Conditions shall be executed by the Client and attached to the first purchase order sent to PBA, it being agreed that they shall accordingly apply to any following Agreement.
1.4 These General Conditions shall be deemed as tacitly accepted by the Client for any supply of Products, unless expressly rejected in writing by the Client by means of notice thereof to be sent to PBA at the latest within 5 (five) days as of the date of receipt of PBA's confirmation of the first purchase order sent by the Client.
Should the Client expressly reject one or more of these General Conditions within the above term, PBA shall be free to withdraw from the relevant Agreement, by means of written communication thereof and without any further obligation.
1.5 In no event shall any general conditions of any nature, inserted and/or specified in the Client's order forms and/or in other documents sent to PBA by the Client, and/or of which the latter was made aware in any manner whatsoever, apply to any Agreement and/or to any supply of Products.
Any special term and/or condition of supply suggested by the Client shall apply to the Agreement only if expressly contained in PBA's order confirmation.
Any change and/or amendment to these General Conditions shall be binding and valid only if accepted in writing by both parties.

2. PLACE AND TERMS OF DELIVERY OF THE PRODUCTS
2.1 The choice of an Incoterm does not affect the location of the place of delivery of the Products which, in any case, shall be deemed as delivered to the Client at the place and in the moment in which they are put at disposal of the haulier, for the relevant transport, at PBA's premises in Tezze sul Brenta (Vicenza), Italy.
In any case, unless otherwise agreed in writing by the parties, PBA shall never be liable for delays accrued during the transportation.
2.2 The terms of delivery of the Products (i) are specified in PBA's order confirmation, (ii) are approximate and roughly set forth and (iii) in no case shall they be construed as of essence.
2.3 In case of delay in the delivery of the Products at PBA's premises, caused by a fortuitous event, force majeure or other causes not depending on PBA's willful misconduct and/or gross negligence, the Client shall not be entitled to claim any compensation for damages, nor to ask for the termination of the Agreement and/or for the reduction of the price of the Products.

3. INCOTERMS
Unless otherwise agreed in writing, the Products and the relevant prices are to be considered with delivery Ex-works (EXW – Incoterms 2000), PBA's premises in Tezze sul Brenta (VI), Italy or at the different place indicated by PBA in the notice Products ready for delivery.

4. ORDERS – NON STANDARD AND/OR MADE TO MEASURE PRODUCTS
4.1 The purchase orders shall be made in writing and completed with all the data required for the relevant design and manufacture.
4.2 When already approved by the Client for the supply of catalogue Products, it is agreed that these General Conditions shall also apply to the sale orders related to non standard Products, Products out of catalogue and/or to be made to measure, if confirmed by PBA.
4.3 Any delay of the Client in the transmission of data, measures and/or technical specifications of the Products subject matter of the Agreement may cause a proportional postponement of the delivery terms, to be newly determined by PBA on the basis of its industrial needs.

5. PRICES AND PAYMENTS
5.1 The prices of the Products indicated in this pricelist are merely indicative and can be modified at any time by PBA.
The actual price of the Products is specified in PBA's order confirmation and, unless otherwise specified, it is deemed as net of VAT.
Any change and/or modification of the Products, agreed by the parties after the transmission of PBA's order confirmation, shall cause the adjustment of the relevant price due to any increase of the costs of production and/or of the raw materials, as agreed from time to time by the parties.
5.2 The price of the Products shall be paid by the Client as per the terms and ways specified in PBA's order confirmation, or otherwise agreed by the parties.
Any late collection or non collection of the Products shall not cause an extension and/or postponement of the terms of payment.
5.3 PBA shall be entitled to suspend the delivery of the Products should: (a) the Client's assets and/or financial standings endanger the relevant payment; (b) the Client fail to timely pay Products previously supplied by PBA, also on the basis of other Agreements, until full payment of the outstanding credit and/or until receipt of proper guarantees of the Client for any delivery in progress, without prejudice to PBA's right to claim for any damages suffered as a consequence thereof.
5.4 In no event shall any vice and/or defect of the Products, even when expressly acknowledged as such by PBA, and/or any delay of delivery as to the agreed terms give the Client the right to suspend the relevant payments and/or any other payment for whichever reason due to PBA also under other contractual relationships.
5.5 In case of late payments, PBA shall be entitled to charge interests on the unpaid amount at the rate provided by the law.
5.6 In no case shall the Client be entitled to set off any amount due to PBA in force of any Agreement against any amount due by PBA at any title whatsoever.

6. RETENTION OF TITLE
PBA shall be the sole owner of the Products until the date of their full payment.
Should the Agreement be terminated due to the Client's breach of contract, any Client's advance payment shall be kept by PBA as an indemnity within the limits set forth by the law, without prejudice to the latter's right to claim for further damages.

7. WARRANTY
7.1 PBA guarantees that the Products will be free from vices and defects in materials and workmanship for a period of 24 (twenty-four) months as of the date of the relevant delivery ("Warranty Period").
7.2 Should the complaints raised by the Client within the Warranty Period with reference to the Products be grounded and accepted by PBA, the latter shall, at its exclusive discretion, repair and/or replace the defective Product/s or the defective component/s of the same, with delivery Ex-works (EXW Incoterms 2000) PBA's premises in Tezze sul Brenta (VI), Italy.
The warranty obligations herewith undertaken shall be effective and binding only provided that PBA has the opportunity to verify the vices and/or defects raised by the Client.
PBA's warranty obligation shall be deemed as entirely fulfilled with the removal of the vice and/or defect raised by the Client, or with the replacement of the defective Product and/or component, without any further obligations.
Unless otherwise agreed in writing by the parties, all the expenses for returning to PBA the defective Products and/or components, as well as all the additional expenses related to the operations of repair or replacement shall be borne by the Client and shall be at the Client's risk.
7.3 Subject to the loss of warranty, the Client shall notify in writing, by registered letter return receipt requested, any vices and/or defects found within and not later than 8 (eight) days as of the date of the actual delivery of the Products, or, in case of hidden vices or defects, within and not later than 8 (eight) days as of the date of the relevant discovery.
7.4 The warranty is expressly excluded for vices and/or defects of the Products arising from or consisting in:
(i) any repair, alteration and/or modification not authorized in writing by PBA;
(ii) normal wear and tear of the materials or of single components;
(iii) improper use and/or application of the Products;
(iv) defects and/or mistakes in the measures and/or technical specifications supplied by the Client;
(v) deposit, maintenance and/or cleaning not in compliance with PBA's instructions;
(vi) installation not in compliance with PBA's instructions and/or carried out with non suitable materials;
(vii) any other event for which PBA is not directly liable.
Should the Client fail to regularly pay the agreed price, even if such default or such delay concerns a single part of the aggregate price of the Products, the warranty shall not apply.
7.5 Without prejudice to the compulsory product's liability law and any liability for willful misconduct and/or gross negligence, PBA shall not be liable for direct, indirect or incidental damages caused to the Client and and/or to third parties as a consequence of the defects of the Products.
The Client shall not be entitled to terminate the Agreement in case of vices and/or defects of the Products subject matter of this warranty, should PBA timely comply with the relevant obligations.
7.6 The Products made of wood, pvc, rubber, rolled sections and/or of other natural materials shall be of a quality equal, within the limits of a reasonable similarity, to the relevant samples examined by the Client before the execution of the Agreement.
In no case shall therefore the samples of the Products examined by the Client be qualified as the exclusive standard for the exterior appearance of the Products.
Without prejudice to the warranty regulated by this clause 7, any chromatic and/or aesthetic difference (nervation of the wood, intensity of the colour shades, etc.) of the delivered Products compared to the characteristics of the relevant samples examined by the Client, shall not entitle the latter to terminate the Agreement and/or to ask for the replacement of the Products or for the reduction of the price.
7.7 In no event shall the chromatic differences between Products of the same type and/or colour, delivered with different lots and/or in different moments, be qualified as vices and/or defects of the Products, nor shall the Client be entitled to claim their replacement and/or the reduction of the relevant price as a consequence thereof.

8. MISPRINTS AND PRINTING ERRORS
We are not responsible for any misprint or printing error in catalogs or price lists. All images and sizes are not binding. Modifications are reserved. Design modifications are reserved to technically enhance products.

9. EXCLUSIVE COURT
All disputes arising out of or relating to these General Conditions, any Agreement and/or to the supply of Products shall be exclusively submitted to and settled by the Court of Vicenza, Italy.
PBA shall in any case be entitled, at its exclusive discretion, to institute legal proceedings against the Client before the Court of the place where the Client has its registered office.

10. APPLICABLE LAW
These General Conditions of sale and any Agreement shall be governed by Italian Law.
Should the Client be a foreign entity or in any case an entity having the registered office or the main place of business abroad, the Contracts related to the supply of the Products shall in any case be regulated by the United Nations Convention on the International Sale of Goods (Wien Convention, April 11, 1980)

11. WAIVER
Failure by PBA to enforce at any time the provisions of these General Conditions shall not be construed as a waiver of such provision or of the right to thereafter enforce each and every provision herein.

12. LANGUAGE
The Client executes these General Conditions in Italian and in English, it being agreed that should any conflict or inconsistency arise among the two versions, the Italian wording shall always prevail.

pba S.p.A. Via Enrico Fermi, 1 I-36056 Tezze sul Brenta (Vicenza) Italia
Tel. +39 0424 5451 Fax +39 0424 545222 info@pba.it www.pba.it

pba USA, Inc. 68 34th Street Suite C405 Unit 20 Industry City Brooklyn NYC
NY 11232 United States Tel. +1 212 255 4605 Fax +1 646 558 0335 office@pba-usa.us www.pba.it

2021 - 144